SpotDiffuser
with Round Duct Adapter

Model: **PK-R & PK-RA**

Seiho's Model PK-R/PK-RA Aluminum SpotDiffuser offers excellent architectural styling for directional control in supply applications. The PK-R designed specifically for mounting to round (spiral) sheet metal duct work, it provides an integral, readily-accessible air flow adjustment. The heavy-gauge anodized, aluminum and stainless steel construction is corrosion-resistant for years of service. The anodized aluminum finish integrates seamlessly with the galvanized sheet metal finish and color.

MATERIAL	FINISH
• Aluminum	• Clear Anodized • Custom Colors Available

Model: **PK-R**
(Exposed Duct Mounted)

MODEL PK-R DIMENSIONS

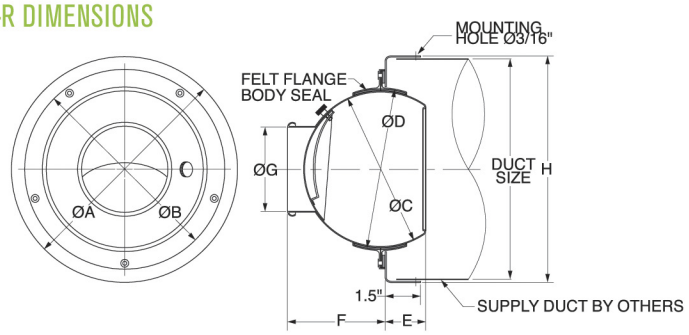

■ Duct Size=PK-R Size Plus 2"-6"

MODEL	DUCT SIZE	A	B	C	D	E	F	G	H
PK 6R	8"	8 11/32	7 15/32	5 29/32	6 7/32	1 1/2	3 11/16	2 15/16	8 1/4
PK 7R	10"	10 3/8	9 3/32	7	7 9/32	1 1/2	4 3/8	3 17/32	10 1/4
PK 8R	11"	11 3/8	9 27/32	7 7/8	8 1/32	1 23/32	4 23/32	3 15/16	11 1/4
PK 10R	14"	14 3/8	12 3/4	10 1/2	10 7/8	1 31/32	6 27/32	5 1/2	14 1/4
PK 12R	16"	16 3/8	14 9/32	12	12 3/8	2 15/32	7 7/8	6 1/2	16 1/4
PK 16R	20"	20 3/8	18 1/2	16 5/32	16 1/2	3 5/8	9 3/4	9 1/16	20 1/4
PK 18R	24"	24 3/8	21 1/16	18 1/2	18 27/32	3 3/4	11 5/8	10 1/4	24 1/4
PK 20R	24"	24 3/8	21 1/16	18 16/32	18 27/32	3 3/4	11 5/8	12 7/32	24 1/4

Product information is subject to change without notice. All dimensions in inches.

Model: **PK-RA**
(Wall/Spiral Duct Mounted)

MODEL PK-RA DIMENSIONS

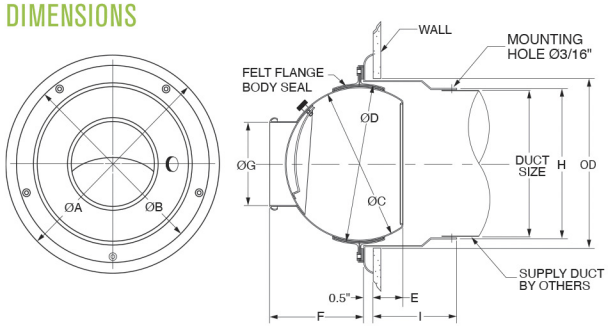

MODEL	DUCT SIZE	A	B	C	D	E	F	G	H	I	OD
PK 6RA	6"	8 11/32	7 15/32	5 29/32	6 7/32	1 1/2	3 11/16	2 15/16	6 1/4	1 1/2	6 11/32
PK 7RA	7"	10 3/32	9 3/32	7	7 9/32	1 1/2	4 3/8	3 17/32	7 1/4	2	7 5/8
PK 8RA	8"	11 27/32	9 27/32	7 7/8	8 1/32	1 23/32	4 23/32	3 15/16	8 1/4	2	8 3/8
PK 10RA	10"	13 3/4	12 3/4	10 1/2	10 7/8	1 31/32	6 27/32	5 1/2	10 1/4	3 1/2	11 5/32
PK 12RA	12"	15 5/16	14 9/32	12	12 3/8	2 15/32	7 7/8	6 1/2	12 1/4	4	12 21/32
PK 16RA	16"	19 1/2	18 1/2	16 5/32	16 1/2	3 5/8	9 3/4	9 1/16	16 1/4	5	16 7/8
PK 18RA	20"	22 1/16	21 1/16	18 1/2	18 27/32	3 3/4	11 5/8	10 1/4	20 1/4	5	20 3/8
PK 20RA	20"	22 1/16	21 1/16	18 16/32	18 27/32	3 3/4	11 5/8	12 7/32	20 1/4	5	20 3/8

Product information is subject to change without notice. All dimensions in inches.

Aluminum SpotDiffuser
Performance Data

Model: **PK-R & PK-RA**

SEIHO
www.seiho.com

SIZE	Approx.Nozzle Velocity		500				1000				1500				2000				2500				3000				3500				4000			
	Terminal Velocity, Vt		50	100	200	400	50	100	200	400	50	100	200	400	50	100	200	400	50	100	200	400	50	100	200	400	50	100	200	400	50	100	200	400
6	Nozzle Area 0.047 sq.ft	CFM	25				50				80				100				120				150				170				190			
		SP (in.,wg)	0.02				0.07				0.18				0.29				0.44				0.82				0.93				1.2			
		NC	-				-				<20				20				21				27				30				33			
		Throw (ft.)	19	10	5	-	30	16	8	4	50	25	13	8	65	31	17	9	80	37	20	10	100	45	23	12	110	55	28	14	125	50	30	15
7	Nozzle Area 0.068 sq.ft	CFM	35				70				110				140				170				210				240				280			
		SP (in.,wg)	0.016				0.06				0.18				0.28				0.41				0.65				0.9				1.25			
		NC	-				-				<20				20				25				29				34				38			
		Throw (ft.)	22	11	6	2	36	19	9	4	60	29	15	8	80	36	19	10	90	45	23	12	105	60	27	14	125	65	32	16	150	72	37	19
8	Nozzle Area 0.085 sq.ft	CFM	45				90				130				170				220				260				300				340			
		SP (in.,wg)	0.016				0.06				0.17				0.27				0.38				0.64				0.92				1.2			
		NC	-				<20				<20				22				27				33				35				39			
		Throw (ft.)	25	12	7	4	40	20	12	6	62	30	16	9	85	39	20	11	105	52	27	13	125	62	30	17	150	72	35	19	162	80	38	20
10	Nozzle Area 0.165 sq.ft	CFM	85				170				250				330				420				500				580				660			
		SP (in.,wg)	0.014				0.06				0.14				0.24				0.44				0.63				0.92				1.2			
		NC	-				<20				<20				20				26				30				34				38			
		Throw (ft.)	30	15	8	5	55	30	14	7	90	42	22	10	112	55	29	14	148	72	36	17	162	84	42	21	190	100	48	24	225	112	55	28
12	Nozzle Area 0.230 sq.ft	CFM	115				230				350				460				580				690				810				920			
		SP (in.,wg)	0.012				0.055				0.12				0.22				0.43				0.6				0.92				1.2			
		NC	-				<20				<20				23				28				32				36				40			
		Throw (ft.)	35	17	9	6	66	35	17	7	100	50	27	13	137	65	34	17	162	82	42	22	187	100	50	26	220	112	57	29	250	130	70	34
16	Nozzle Area 0.448 sq.ft	CFM	225				450				680				900				1120				1350				1570				1800			
		SP (in.,wg)	0.012				0.06				0.12				0.21				0.41				0.62				0.9				1.2			
		NC	-				20				21				26				29				37				40				44			
		Throw (ft.)	47	25	12	7	90	47	24	12	138	66	36	18	175	95	47	23	225	112	55	28	250	137	65	35	275	160	80	42	350	175	95	47
18	Nozzle Area 0.573 sq.ft	CFM	290				580				860				1150				1440				1720				2010				2300			
		SP (in.,wg)	0.01				0.06				0.10				0.21				0.42				0.6				0.9				1.15			
		NC	-				<20				20				25				31				35				39				42			
		Throw (ft.)	55	27	13	7	112	55	27	13	152	98	40	20	200	110	52	26	250	125	67	33	300	155	78	40	350	175	90	47	400	200	110	48
20	Nozzle Area 0.814 sq.ft	CFM	410				820				1230				1630				2040				2450				2850				3260			
		SP (in.,wg)	0.01				0.06				0.12				0.17				0.41				0.61				0.9				1.2			
		NC	-				<20				20				27				32				38				42				45			
		Throw (ft.)	70	38	20	10	150	75	39	18	220	112	56	29	275	150	75	37	350	175	90	47	400	212	112	56	425	250	125	65	450	275	150	75

DASHED LINE IN SP BOX INDICATES STATIC PRESSURE IS LESS THAN 0.01 IN.W.G.
DASHED LINE IN NC BOX INDICATES NOISE LEVEL IS LESS THAN 20.
NC LEVEL IS BASED ON 10dB ROOM ATTENUATION(PWL RE:10-12 WATTS) WITH ONE DIFFUSER OPERATING.